Ages
6+

BILLIARDS

55202

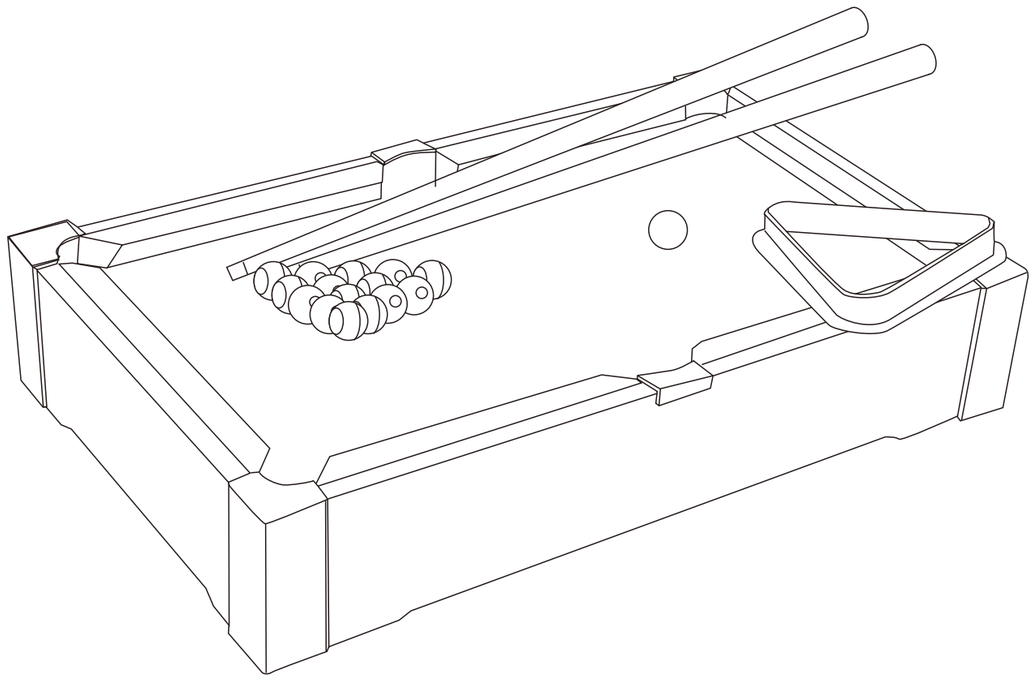

NOTE: Be sure the product is completely assembled before playing.

⚠ WARNING:
CHOKING HAZARD--Toy contains small balls and small parts. Not for children under 3 yrs.

Franklin Sports Inc.
Stoughton, MA 02072
Made in China
www.franklinsports.com

PARTS

Number		Qty	Number		Qty
A1		X2	A6		X1
A2		X2	A7		X1
A3	(3cm)	X4	A8		X1
A4	(6.5cm)	X4	A9		X1
A5		X1			

Installation Guide

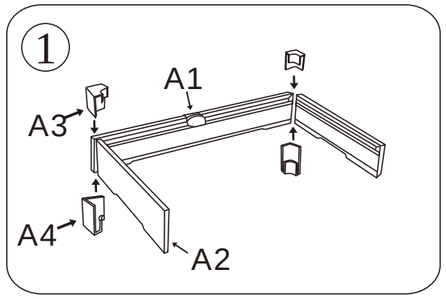

Assemble two short boards (A2) and one long board (A1), then connect to up/down plastic corner (A3/A4).

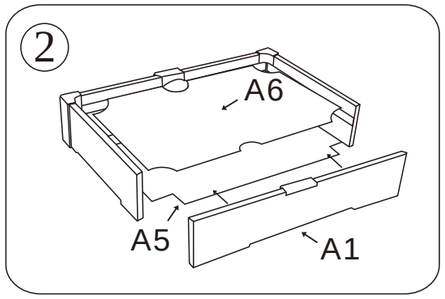

Insert the play field board (A6) above the bottom board (A5) into the assemble boards. Insert the last long board right to the position (A1).

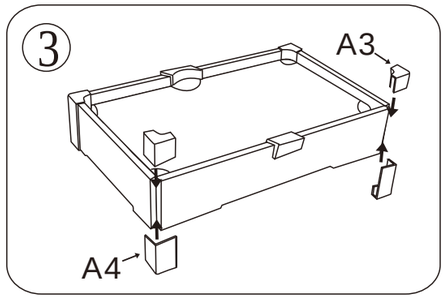

Use up/down plastic corner (A3/A4) to lock the table.